Value Chain Event on Oilseed Crops
Inperial College London, 27/03/19

Developing harvesting systems for oil crops: the case of cardoon

Luigi Pari P.h.D

CREA IT Consiglio per la Ricerca in Agricoltura e l'Analisi dell'Economia Agraria,
Centro di ricerca Ingegneria e Trasformazioni agroalimentari
Via delle Pascolare, 16 - 00016 Monterotondo (Roma)
Tel. 0039 06 90675 250 – email: luigi.pari@crea.gov.it

Plant description (1/2)

Cynara cardunculus L.

- Asteraceae (Compositae)
- Mediterranean origin
- Perennial herb
- Annual growth cycle
- Very deep root system
- Floral stem 2-3 m high
- Gross heads (capitula)
- Lilac-violet florets
- Oil fruits (achenes)

Plant description (2/2)

PLANTLETS (autumn)

SPROUTING (September)

ROSETTE (winter)

ELONGATION (spring)

BLOSSOM (June)

DRYING (August)

FRUITS ('seeds')

Use of Cynara cardunculus

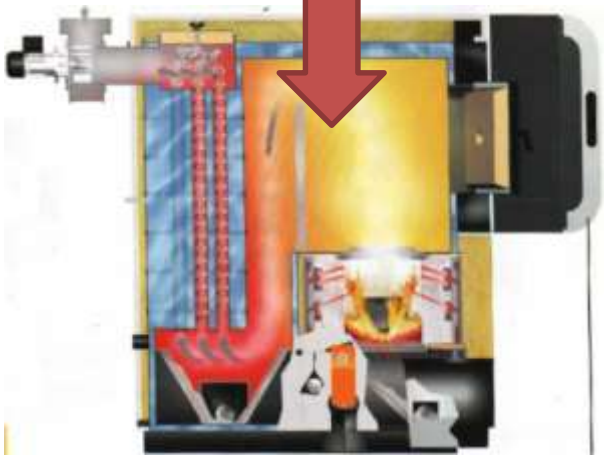

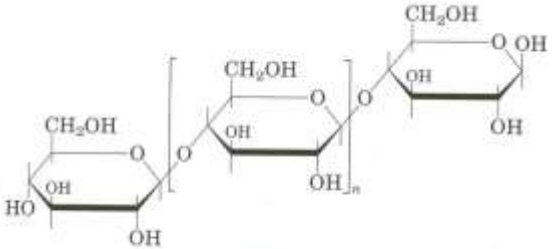

Mechanization Solution

CREA-IT First Head prototype (1/4)

BIOCARD PROJECT
Global Process to improve Cynara cardunculus exploitation for energy applications, FP6-Energy-3, E.U. 2005/ 2008

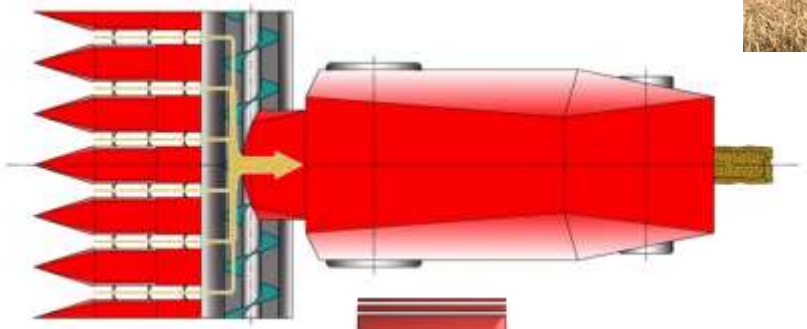

Built by Cressoni Firm

CREA-IT First Head prototype (2/4)

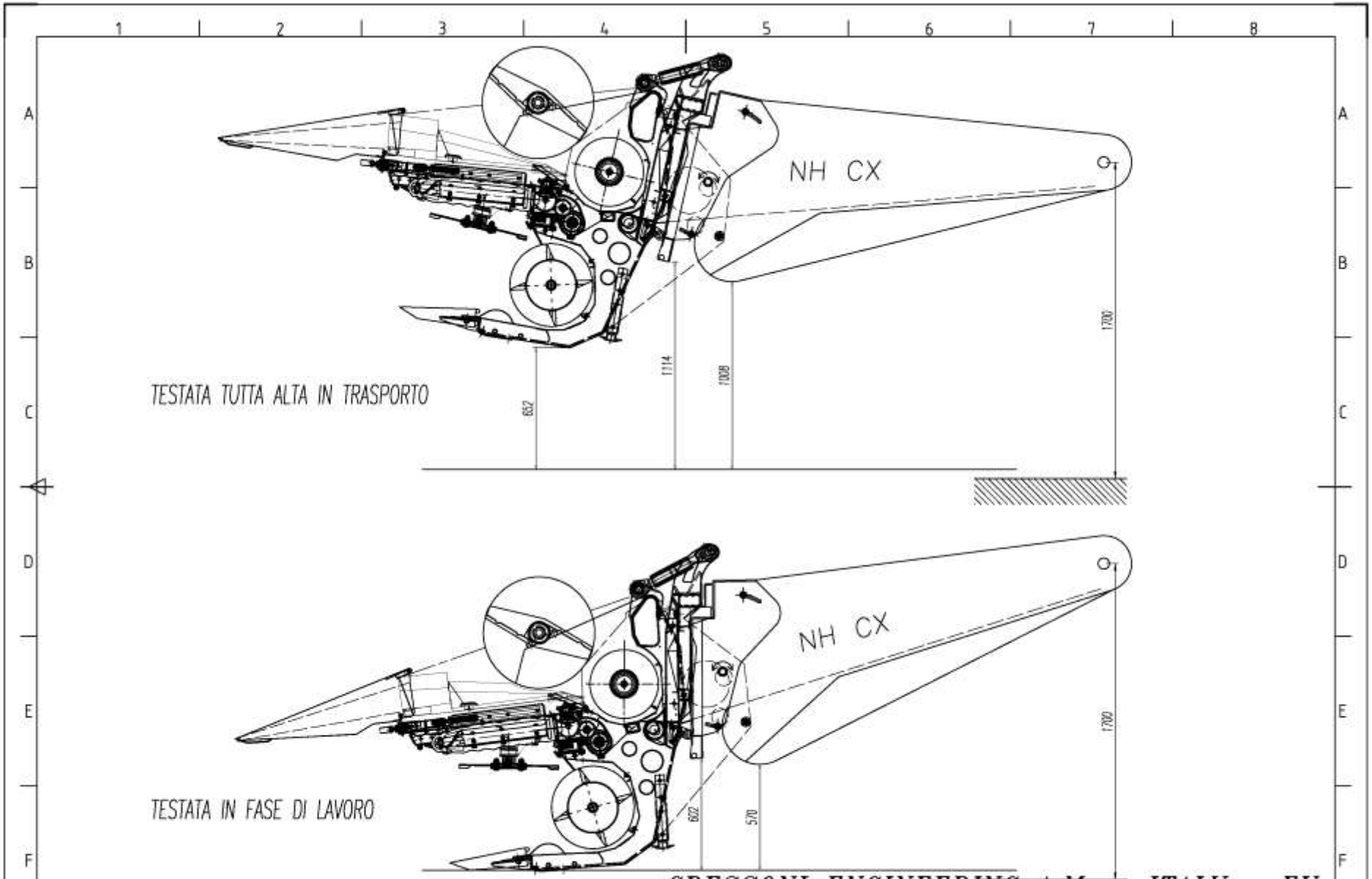

CREA-IT First Head prototype (3/4)

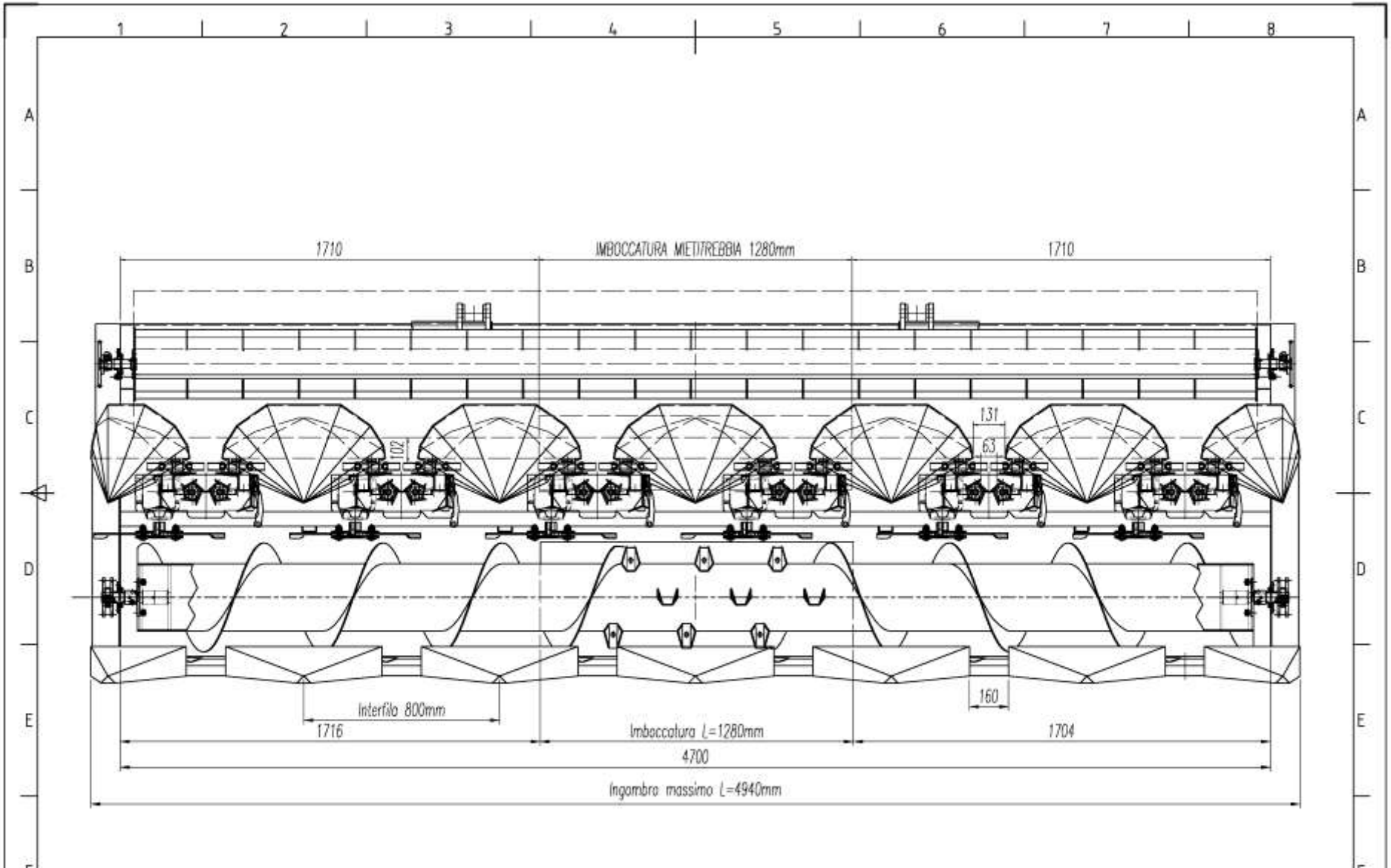

CREA-IT First Head prototype (4/4)

Developing of a second head for Cynara c.

ProJect BIT3G: Bioraffineria di terza generazione – founded by Italian Ministry of Research 2014/2016

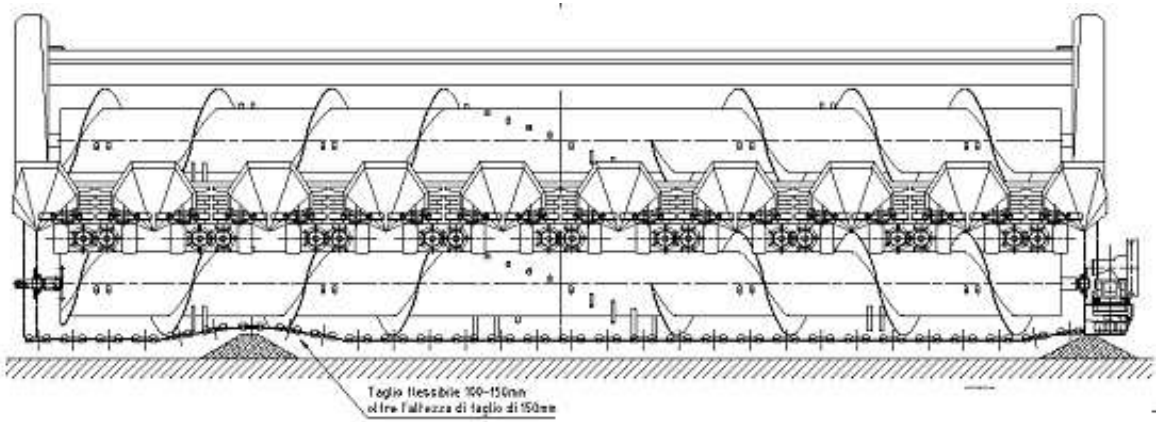

Dimension:

width: 4,94 m

hight: 1,731 m

long: 2,77 m

weight: 3000 Kg

Main differences with the first one

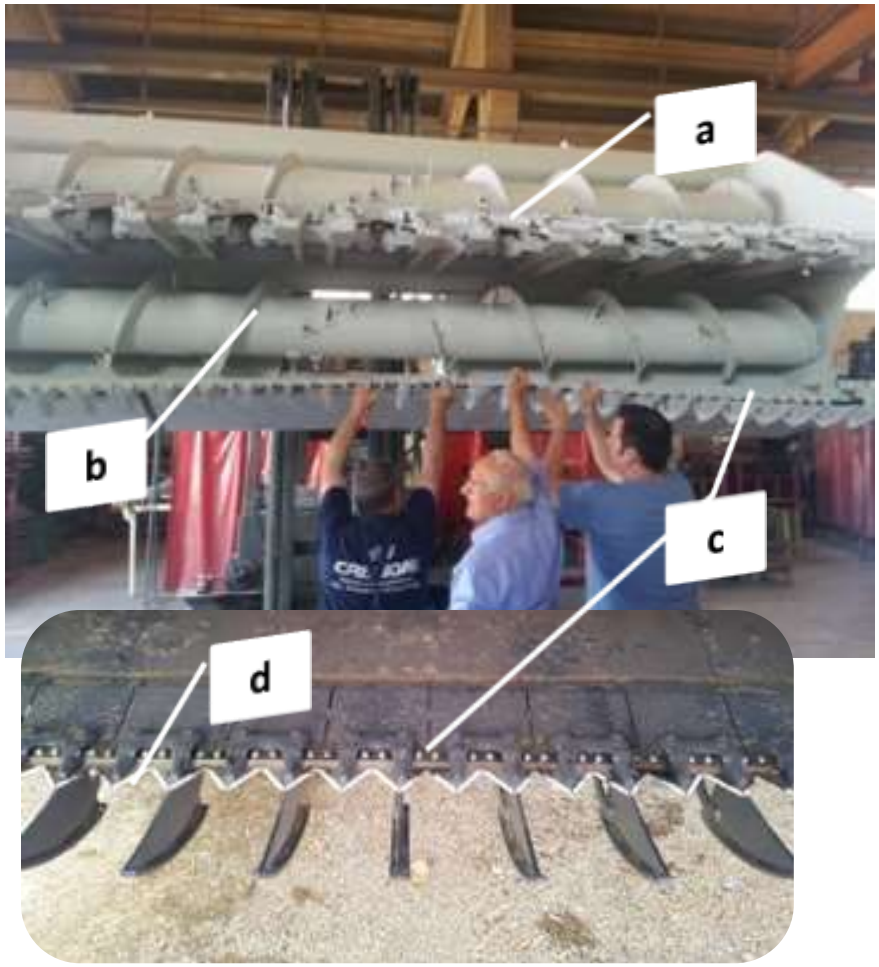

a. 9 rows instead of 6 rows

To increase the performance

c. Blade in armonic iron

Flexible blade to follow the soil profile

d. Boots

to avoid stones

e. Authomatic lifting of the head

To overcome huge stones

Developing of a second head for cyara c.

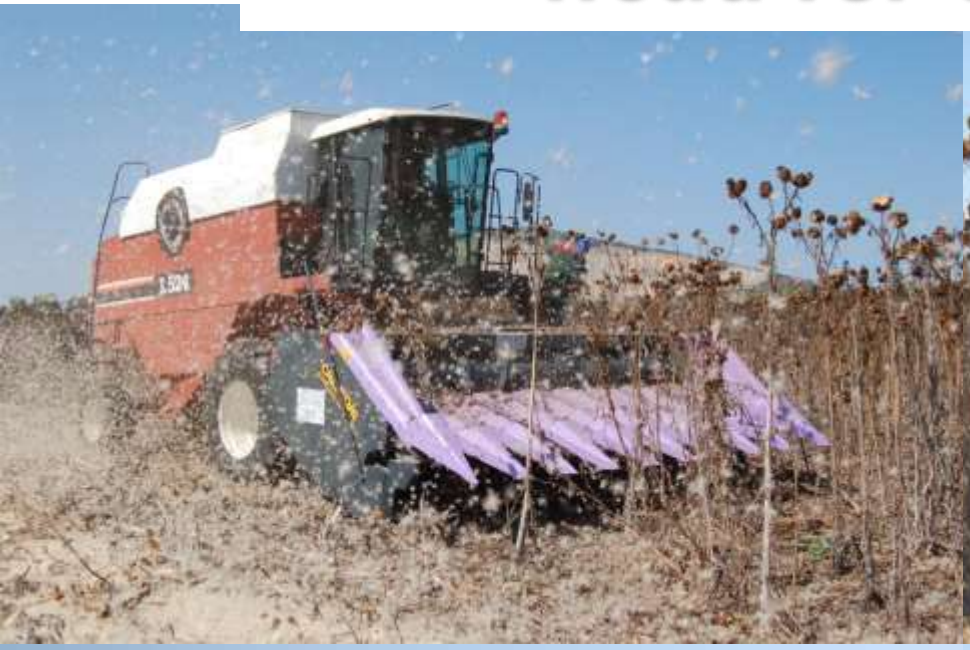

Testing and comparison of the 2 heads

Thesi 1
Head BIOCARD
Attached to an
NEW HOLLAND CS 540 combine

Thesi 2
Head BIT3G
Attached to an
LAVERDA L524 combine

Evaluation of work efficency

Morphological pharameters	Thesi 1	Tesi 2
Area(ha)	0,78	0,85
Distance on the row (m)	0,50	0,50
Distance among the rows(m)	0,75	0,75
Plant density(n. ha^{-1})	19.400	17.400
Plantation age (years)	2	2
height (m)	2,20	2,00
Plant diamater at 10 mm from ground (mm)	33,10	28,80
Stalks for plant (n.)	1,20	1,30
Stalksfor Hecatare (n. ha^{-1})	22.800	22.400
Capitula for plant (n.)	6,00	4,70
Capitula for hecatare(n. ha^{-1})	125.000	106.000
Biomass humidity(%)	38,54	23,94
Biomass production f.m (ton. ha^{-1})	20,30	13,03
Plant production (ton. ha^{-1})	16,10	9,60
Capitula production(ton. ha^{-1})	4,16	3,42

Comparison of work efficency

Times	Unit	Thesi 1	Thesi 2
Effective time	%	83,56	94,96
Accessory time:			
Time for turns	%	16,44	5,04
Maintenance	%	0,00	0,00
Total accessory time	%	16,44	5,04
Standard time	%	100,00	100,00
Machineperformance			
Operating performance	%	83,56	94,96
Effective speed	$m\ s^{-1}$	0,60	1,03
Operative speed	$m\ s^{-1}$	0,50	0,98
Effective working capacity	$ha\ h^{-1}$	1,10	1,67
Operative working capacity	$ha\ h^{-1}$	0,92	1,59

Hairs collection activity

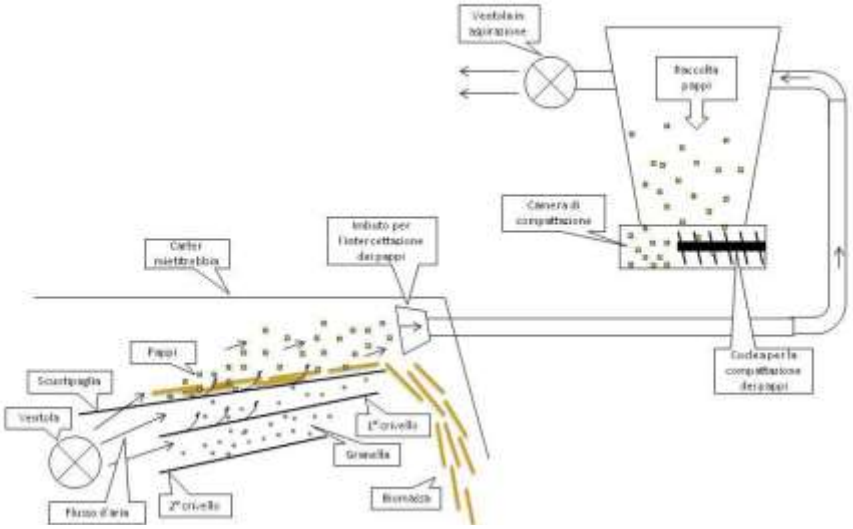

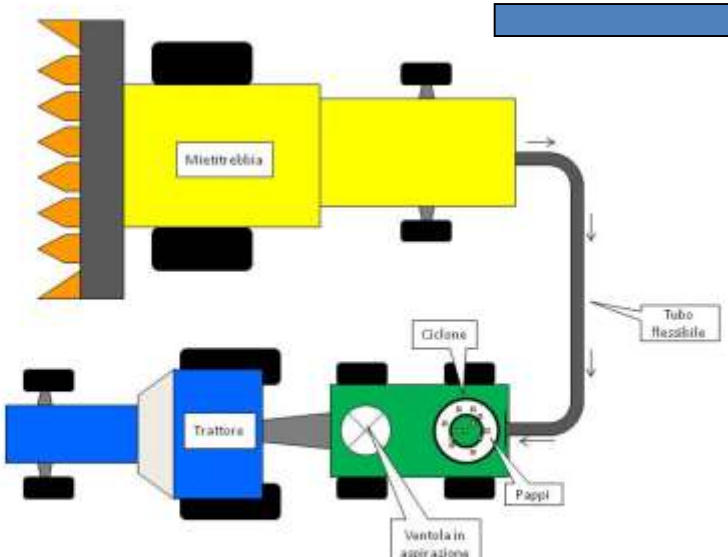

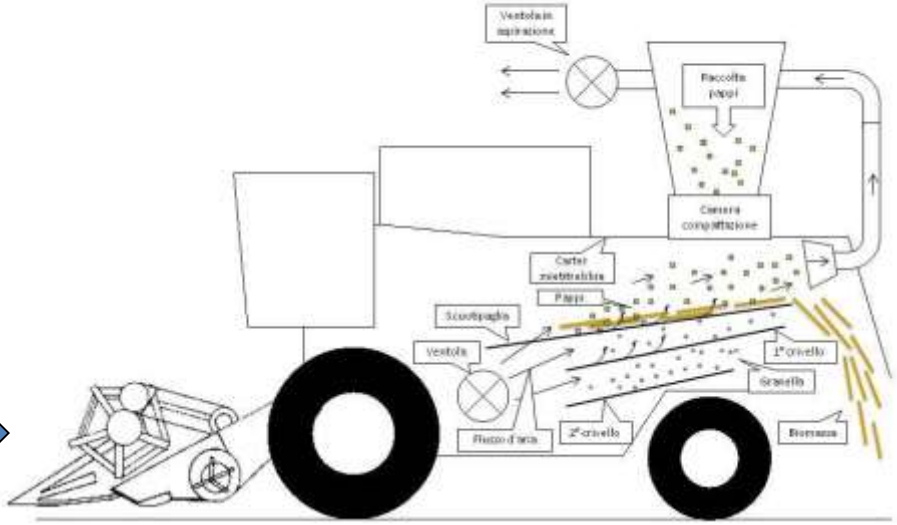

Hairs collection activity

Conclusions

1. The prototypes now is in the commercial phase
2. The machine could be adapted to different crops, such as sunflower and maize for collecting their by-products. Such adaptation will reduce costs utilisation of the head.
3. Taken into account the features of marginal lands where the crop was cultivated as well as the limited annual rains, the crop productivity seems to be very interesting compare with other oil crops in south of Europe.
4. The possibility of using the lingo-cellulosic fraction for energy production and to avoid annual tillage and planting costs, let the crop economic balance attractive.

luigi.pari@crea.gov.it

thank you for your attention